RIKÄ
QUALITY GUARANTEED.

Owner's Operating Manual
Model No: RK40RS

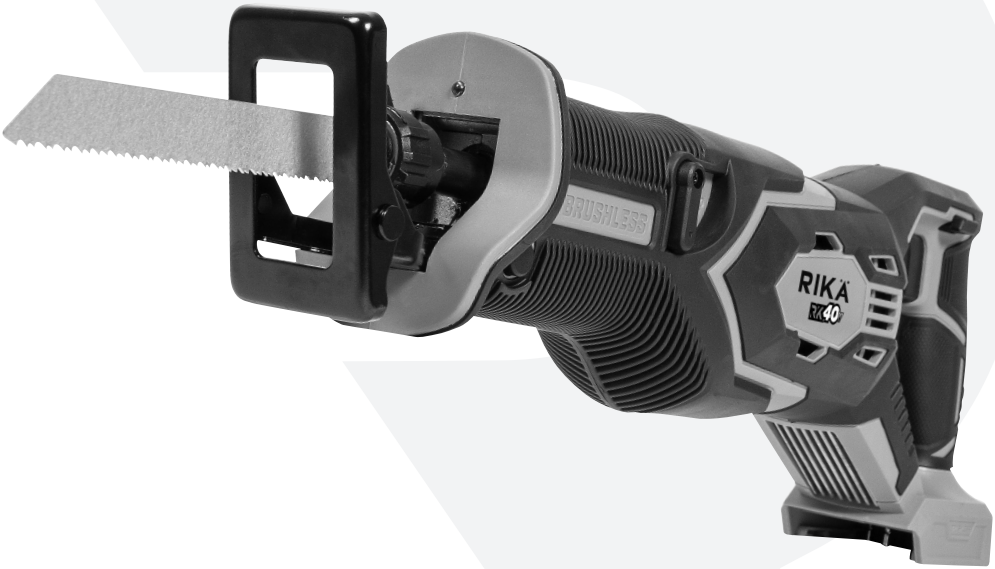

RK40V
BRUSHLESS TECHNOLOGY

Cordless Reciprocating Saw

IMPORTANT! PLEASE READ THESE INSTRUCTIONS CAREFULLY. NOTE ALL SAFETY INSTRUCTIONS AND WARNINGS. USE THE PRODUCT CORRECTLY AND WITH CARE FOR THE PURPOSE FOR WHICH IT IS INTENDED. FAILURE TO FOLLOW THESE INSTRUCTIONS MAY CAUSE DAMAGE TO PROPERTY AND/OR PERSONAL INJURY.

KEEP THESE INSTRUCTIONS SAFE AND AVAILABLE FOR FUTURE REFERENCE.

Certificate of Guarantee

This product is guaranteed for a period of 1 year, with effect from the date of purchase and applies only to the original purchaser. The warranty can be extended a further 2 years by registering the purchase on **rikapowertools.com** within 30 days of purchase. This guarantee applies to defects arising from, defective materials or faulty workmanship that become evident during the guarantee period only and does not include consumable items. The manufacturer will either repair or replace the product at their discretion, subject to the following.

That the product has been used in accordance with the guidelines as detailed in the product manual and that it has not been subject to misuse, abuse or used in a purpose for which it was not intended. That it has not been taken apart or tampered with in any way whatsoever or has been service by unauthorised persons or has been used for hire purposes.

Transit damage and accessories are excluded from this guarantee.

Claims made under this guarantee must be made directly to Customer Service:
01332 576 850 within the guarantee period. Receipt and proof of purchase required.

The manufacturer shall not be liable for any special, exemplary, direct, indirect, incidental or consequential loss or damage under this guarantee.

Introduction

Thank you for purchasing this product which has passed through our extensive quality assurance process. Every care has been taken to ensure that it reaches you in perfect condition. However, in the unlikely event that you should experience a problem, or if we can offer any assistance or advice please do not hesitate to contact our customer service.

Safety First
Before attempting to operate this product the following basic safety precautions should always be taken to reduce the risk of fire, electric shock and personal injury. It is important to read the instruction manual to understand the application, limitations and potential hazards associated with this product.

After-Sales Service

Should you require any further assistance regarding your product or in the unlikely event of a defect occurring, please contact us at **rikapowertools.com**. When contacting us, be ready to provide the product Model No: and the serial number found on the product.

Intended Use

The tool is intended for sawing wood, plastic and ferrous materials.

Any other application beyond the conditions established for use will be considered misuse. RIKA accepts no responsibility for improper use of this product.

Important Safety Instructions

Due to continued product refinement policy, product features and specifications can and will change without notice.

Check current features and specifications with your retailer.

The purpose of safety rules is to attract your attention to possible dangers. The safety symbols and the explanations with them, require your careful attention and understanding. The safety warnings do not by themselves eliminate any danger. The instruction or warnings they give are not substitutes for proper accident prevention measures.

SAFETY ALERT SYMBOL

Indicates danger, warning, caution or notice. May be used in conjunction with other symbols or pictures.

DANGER indicates a hazardous situation which, if not avoided, will result in death or serious injury.

WARNING indicates a hazardous situation which, if not avoided, could result in death or serious injury.

CAUTION indicates a hazardous situation which, if not avoided, could result in minor or moderate injury.

NOTICE indicates information considered important, but not hazard-related (e.g., messages relating to property damage).

Failure to obey a safety warning can result in serious injury to yourself or to others. Always follow the safety precautions to reduce the risk of fire, electric shock and personal injury.

Do not attempt to operate this tool until you have read thoroughly and completely understood the safety rules, etc. contained in this manual. Failure to comply can result in accidents involving fire, electric shock or serious personal injury. Save this Owners Operating Manual and review it frequently for continual safe operation and for instructing others who may use this tool.

SPECIFIC SAFETY INSTRUCTIONS

WARNING! Read and understand all instructions. Failure to follow all instructions listed below could result in electrocution, fire, and/or explosion, which can cause death or serious injury.

Operations for which the power tool was not designed may create a hazard and cause personal injury.

Do not use accessories which are not specifically designed and recommended by the tool manufacturer. Just because the accessory can be attached to your power tool, it does not assure safe operation.

The product is not intended for use by children or persons with reduced physical, sensory, or mental capabilities, or lack of experience and knowledge.

Children should be adequately supervised to ensure they do not play with the product.

WARNING! Some dust particles created by power sanding, sawing, grinding, drilling and other construction jobs contain chemicals known to cause cancer, birth defects or other reproductive harm. Some examples of these chemicals are:

- Lead from lead-based paints.
- Crystalline silica from bricks and cement and other masonry products.
- Arsenic and chromium from chemically treated timber.

Important Safety Instructions

WARNING! If you suspect that paint on surfaces in your home contains lead, seek professional advice. Lead based paints should only be removed by a professional and you should not attempt to remove it yourself. Once the dust has been deposited on surfaces, hand to mouth contact can result in the ingestion of lead. Exposure to even low levels of lead can cause irreversible brain and nervous system damage. Young and unborn children are particularly vulnerable.

Do not expose to rain or water.

Wear hearing protection when necessary. Exposure to noise can cause hearing loss.

WARNING! The operation of any power tool can result in foreign objects being thrown towards your eyes, which could result in severe eye damage. Before beginning power tool operation, always wear safety goggles or safety glasses with side shield or a full face shield where needed.

Wear personal protective equipment. Depending on application, use face shield, safety goggles or safety glasses. As appropriate, wear dust mask, hearing protectors, gloves and workshop apron capable of stopping small abrasive or workpiece fragments. The eye protection must be capable of stopping flying debris generated by various operations. The dust mask or respirator must be capable of filtrating particles generated by your operation. Prolonged exposure to high intensity noise may cause hearing loss.

SAFETY WARNINGS SPECIFIC FOR RECIPROCATING SAWS

Hold the power tool by insulated gripping surfaces only, when performing an operation where the cutting tool may contact hidden wiring. Contact with a "live" wire will also make exposed metal parts of the power tool "live" and could give the operator an electric shock.

Use clamps or another practical way to secure and support the workpiece to a stable platform. Holding the work by hand or against your body leaves it unstable and may lead to loss of control.

Keep hands away from the sawing range. Do not reach under the workpiece. Contact with the saw blade can lead to injuries.

Apply the machine to the workpiece only when switched on. There is danger of kickback when the cutting tool jams in the workpiece.

Turn the product off immediately, if the cutting blade gets jammed.

When sawing, the adjustable footplate must always face against the workpiece. The saw blade can become wedged and lead to loss of control over the machine.

Do not force the reciprocating saw, let the reciprocating saw do the work. Forcing the reciprocating saw will reduce the life of the blade putting undue pressure on the machine.

When the cut is completed, switch off the machine and then pull the saw blade out of the cut only after it has come to a standstill. In this manner you can avoid kickback and can place down the machine securely.

Use only undamaged saw blades that are in perfect condition. Bent or dull saw blades can break, negatively influence the cut, or lead to kickback.

Do not bring the saw blade to a stop by applying side pressure after switching off. The saw blade can be damaged, break or cause kickback.

Important Safety Instructions

Always wait until the machine has come to a complete stop before placing it down. The tool insert can jam and lead to loss of control over the power tool.

Use suitable detectors to determine if utility lines are hidden in the work area or call the local utility company for assistance. Contact with electric lines can lead to fire and electric shock. Damaging a gas line can lead to explosion. Penetrating a water line causes property damage or may cause an electric shock.

Always be sure that the tool is switched off and the battery pack is removed before attempting to perform inspection or maintenance.

Use the correct blade for the job and replace the blade as soon as it becomes worn, this will ensure ease of cutting and prolong the life of the machine. Never try and adapt and use the machine for a purpose it was not intended.

The saw blade should not be longer than required for the intended cut. Use a narrow saw blade when sawing tight curves.

Check the saw blade is correctly installed and secure. A loose saw blade can fall out and lead to injuries.

When ejecting the saw blade, hold the machine in such a manner that no persons or animals can be injured by the ejected saw blade.

Keep blades sharp. Dull blades may cause the saw to swerve or stall under pressure.

Prevent dust accumulation at the workplace. Dusts can easily ignite.

Before sawing in wood, particle boards, building materials etc., check for foreign objects, such as nails, screws, etc. and remove them as required.

Ensure that there are no obstructions underneath the work piece, it is easy to cut into sawhorses and bench tops.

Do not attempt to saw extremely small workpieces.

Use caution when cutting hollow pipe and do not cut material where the blade can enter the pipe when fully retracted, this can cause the blade to strike the inside of the pipe causing the user to experience unexpected reaction forces.

In extreme conditions, always use dust extraction as far as possible. Clean out your tool often, especially after heavy use. Dust and grit containing metal particles often accumulate on interior surfaces and could create an electric shock hazard.

Do not touch the blade or the workpiece immediately after operation; they may be extremely hot and could burn your skin.

Always use the correct dust mask/ respirator for the material and application you are working with.

Keep handles dry, clean, free from oil and grease. This will enable better control of the tool.

Ensure that the air vents are always unobstructed and clear. Clean them if necessary with a soft brush. Blocked air vents may lead to overheating and damage the product.

Switch the product off immediately if you are disturbed while working by other people entering the working area. Always let the product come to complete stop before putting it down.

Do not overwork yourself. Take regular breaks to ensure you can concentrate on the work and have full control over the product.

For cutting curves and pockets, use an adapted saw blade.

Important Safety Instructions

Do not operate this tool for long periods of time. Vibration caused by the operating action of this tool may cause permanent injury to fingers, hands, and arms. Use gloves to provide extra cushion, take frequent rest periods, and limit daily time of use.

KICKBACK AND RELATED WARNINGS

Kickback is a sudden reaction to a pinched, bound or misaligned saw blade, causing an uncontrolled saw to lift up and out of the work-piece toward the operator.

When the blade is pinched or bound tightly by the kerf closing down, the blade stalls and the motor reaction drives the unit rapidly back toward the operator.

If the blade becomes twisted or misaligned in the cut, the teeth at the back edge of the blade can dig into the top surface of the wood causing the blade to climb out of the kerf and jump back toward the operator.

Kickback is the result of saw misuse and/or incorrect operating procedures or conditions and can be avoided by taking proper precautions as given below.

1. Maintain a firm grip with both hands on the saw and position your arms to resist kickback forces. Position your body to either side of the blade, but not in line with the blade.
2. When blade is binding, or when interrupting a cut for any reason, release the trigger and hold the saw motionless in the material until the blade comes to a complete stop. Never attempt to remove the saw from the work or pull the saw backwards while the blade is in motion or kickback may occur.
3. When restarting a saw in the workpiece, centre the saw blade in the kerf and check that saw teeth are not engaged into the material.
4. Support large panels to minimise the risk of blade pinching and kickback.
5. Do not use dull or damaged blades. Unsharpened or improperly set blades produce narrow kerf causing excessive friction, blade binding and kickback.
6. Blade depth and bevel adjusting locking levers must be tight and secure before making a cut. If blade adjustment shifts while cutting, it may cause binding and kickback.
7. Use extra caution when sawing into existing walls or other blind areas. The protruding blade may cut objects that can cause kickback.

ADDITIONAL SAFETY INSTRUCTIONS FOR BATTERIES

Only use the following batteries and chargers with this tool.

RIKA 2000mAh Li-Ion Battery: RK40B2
RIKA 4000mAh Li-Ion Battery: RK40B4
RIKA 4000mAh Li-Ion Battery: RK40TB4

RIKA 2.4A Fast Charger: RK40FC2
RIKA 4.0A Fast Charger: RK40FC4
RIKA 4.5A Dual Fast Charger: RK40DFC4

Battery packs are shipped in a low charge condition. You should charge a battery pack fully before use.

Do not incinerate a battery pack even if it is seriously damaged or can no longer hold a charge. A battery pack can explode in a fire.

A small leakage of liquid from the battery pack may occur under extreme usage or temperature conditions. This does not necessarily indicate a failure of the battery pack. However, if the outer seal is broken and this leakage comes into contact with your skin wash the affected area quickly with soap and water. If the leakage gets in your eyes flush your eyes with clean water for a minimum of 10 minutes and seek immediate medical attention.

Important Safety Instructions

Never attempt to open a battery pack for any reason. If the plastic housing a battery pack breaks open or cracks, immediately discontinue its use and do not recharge it.

Do not store or carry a spare battery pack in a pocket or toolbox or any other place where it may come into contact with metal objects. The battery pack may be short-circuited causing damage to the battery pack, burns or a fire.

CHARGING BATTERIES

When charging a new battery pack it should be fully discharged followed by a full charge for the charging rate for the battery as stated in its product manual plus 30 minutes. This should then be followed by a full discharge and a further full charge for the charging rate for the battery as stated in its product manual plus 30 minutes. This procedure will condition the battery and equalise the cell voltages. Following this procedure will ensure the optimum operation of the battery.

When repeatedly using a charger to charge a number of batteries always allow the charger to cool down before charging another battery. It is recommended that the cooling down period is not less than 30 to 45 minutes.

When charging a battery that has been discharged during heavy use allow the battery to cool down before charging. It is recommended that the cooling down period is not less than 30 to 45 minutes.

Battery packs need to be recharged with a reasonable amount of care, largely because they can be damaged by overcharging.

Overcharging can result in the battery temperature and internal pressure to rise rapidly. This can cause the cells to distort and lose electrolyte, and in extreme cases where the internal pressure is extremely high they can even explode.

This situation can also arise when an overcharged battery is fitted to the product and is being used. In order to avoid this extreme situation it is of vital importance that NiCad and/or Li-Ion batteries are fully discharged before charging and that the charge time is not exceeded except when “Conditioning” a new battery. Repeated charging of partially discharged batteries could cause failure of one or more of the cells.

SELF DISCHARGE

A lithium battery can self discharge and lose its stored charge. Typically it can lose approximately 5% of its charge in the first month after fully charging (when stored at room temperature), and then loses it by a further 3% per month. When stored at higher temperatures the self discharge rate will be accelerated.

BATTERY CHARGING INDOORS

Chargers are designed to be used indoors. We do not recommend that chargers are used inside your home. Ideally batteries should be charged on a bench in a workshop, garage or shed. If the charging operation is to be carried out in your home the area must be well ventilated and the charger must be placed on a non combustible surface ensuring that the ventilation slots are not blocked.

Never exceed the charging time except when “Conditioning” a new battery, as this could damage a battery and charger.

BATTERY DISPOSAL

When a battery fails to charge or maintain its charge, its usable life is exhausted. To preserve natural resources, please recycle or dispose of a battery pack properly. Before disposal ensure that the battery pack is fully discharged by operating your cordless product, then remove the battery pack from the tool housing and cover the battery pack connections with heavy duty tape, to prevent short circuit and energy

discharge which could result in a fire. Do not attempt to open or remove any of the components.

Consult your local waste authority for information regarding available recycling and / or disposal options.

SPECIFIC SAFETY INSTRUCTIONS

RE-CHARGEABLE BATTERIES

Batteries may leak or explode if not charged or handled correctly. Always observe the following precautions when handling batteries. Ensure that the machine is switched off before removing or fitting batteries.

Do not use a battery with any other product that is not recommended.

Do not attempt to fit a battery the wrong way round.

Do not short out, or attempt to dismantle a battery.

Do not expose a battery to flames or excessive heat.

Do not immerse in or expose a battery to water.

Do not store or transport a battery with loose metal objects such drill and driver bits.

Batteries are prone to leakage when discharged. To avoid damage to the product, remove or re-charge the battery when no charge remains. Store the battery in a cool place when not in use.

After prolonged use a battery may become hot. Before removing a battery, switch the machine off and allow the battery to cool down. Do not use the battery if you notice any discolouration or distortion of the battery casing.

RESIDUAL RISKS

Even when the unit is used as prescribed it is not possible to eliminate all residual risk factors. The following hazards may arise in connection with the unit's construction and design:

1. Damage to hearing caused by noise. Wear suitable hearing protection and limit exposure.
2. Injury to the eyes. Wear protective eye shields or goggles when using the product.
3. Injury caused by vibration. Limit exposure. Follow the instructions in Risk Reduction.
4. Electric shock caused by contact with hidden wires. Hold the product only by insulated services.
5. Risk of injury when changing the blade.
6. Injury caused by dust. Dust created by operating the product can cause respiratory injury. Wear appropriate dust control mask with filters suitable for protecting against particles from the material being worked on.

RISK REDUCTION

It has been reported that vibrations from handheld tools may contribute to a condition called Raynaud's Syndrome in certain individuals. Symptoms may include tingling, numbness, and blanching of the fingers, usually apparent upon exposure to cold.

Hereditary factors, exposure to cold and dampness, diet, smoking and work practices are all thought to contribute to the development of these symptoms. There are measures that can be taken by the operator to possibly reduce the effects of vibration:

Keep your body warm in cold weather. When operating the unit, wear gloves to keep the hands and wrists warm.

It is reported that cold weather is a major factor contributing to Raynaud's Syndrome.

Important Safety Instructions

After each period of operation, exercise to increase blood circulation.

Take frequent work breaks. Limit the amount of exposure per day.

If you experience any of the symptoms of this condition, immediately discontinue use and see your doctor about these symptoms.

WARNING! Injuries may be caused, or aggravated, by prolonged use of a tool. When using any tool for prolonged periods, ensure you take regular breaks.

WARNING
This unit produces an electromagnetic field during operation. This field may under some circumstances interfere with active or passive medical implants. To reduce the risk of serious or fatal injury, we recommend persons with medical implants to consult their physician and the medical implant manufacturer before operating this unit.

GENERAL SAFETY RULES

WARNING! Read all instructions Failure to follow all instructions listed below may result in electric shock, fire and/or serious injury. The term "power tool" in all of the warnings listed below refers to your mains operated (corded) power tool or battery operated (cordless) power tool.

SAVE THESE INSTRUCTIONS

1) WORK AREA

a) **Keep work area clean and well lit.** Cluttered and dark areas invite accidents.

b) **Do not operate power tools in explosive atmospheres, such as in the presence of flammable liquids, gases or dust.** Power tools create sparks which may ignite the dust or fumes.

c) **Keep children and bystanders away while operating a power tool.** Distractions can cause you to lose control.

2) ELECTRICAL SAFETY

a) **Power tool plugs must match the outlet. Never modify the plug in any way. Do not use any adapter plugs with earthed (grounded) power tools.** Unmodified plugs and matching outlets will reduce risk of electric shock.

b) **Avoid body contact with earthed or grounded surfaces such as pipes, radiators, ranges and refrigerators.** There is an increased risk of electric shock if your body is earthed or grounded.

c) **Do not expose power tools to rain or wet conditions.** Water entering a power tool will increase the risk of electric shock.

d) **Do not abuse the cord. Never use the cord for carrying, pulling or unplugging the power tool. Keep cord away from heat, oil, sharp edges or moving parts.** Damaged or entangled cords increase the risk of electric shock.

e) **When operating a power tool outdoors, use an extension cord suitable for outdoor use.** Use of a cord suitable for outdoor use reduces the risk of electric shock.

f) **If operating a power tool in a damp location is unavoidable, use a residual current device (RCD) protected supply.** Use of an RCD reduces the risk of electrical shock.
NOTE: The term “residual current device (RCD)” can be replaced by the term “ground fault circuit interrupter (GFCI)” or “earth leakage circuit breaker (ELCB)”.

Important Safety Instructions

3) PERSONAL SAFETY

a) **Stay alert, watch what you are doing and use common sense when operating a power tool. Do not use a power tool while you are tired or under the influence of drugs, alcohol or medication.** A moment of inattention while operating power tools may result in serious personal injury.

b) **Use personal protective equipment. Always wear eye protection.** Safety equipment such as dust mask, non-skid safety shoes, hard hat, or hearing protection used for appropriate conditions will reduce personal injuries.

c) **Prevent unintentional starting. Ensure the switch is in the off-position before connecting to power source and/or battery pack, picking up or carrying the tool.** Carrying power tools with your finger on the switch or energising power tools that have the switch on invites accidents.

d) **Remove any adjusting key or wrench before turning the power tool on.** A wrench or a key left attached to a rotating part of the power tool may result in personal injury.

e) **Do not overreach. Keep proper footing and balance at all times.** This enables better control of the power tool in unexpected situations.

f) **Dress properly. Do not wear loose clothing or jewellery. Keep your hair, clothing and gloves away from moving parts.** Loose clothes, jewellery or long hair can be caught in moving parts.

g) **If devices are provided for the connection of dust extraction and collection facilities, ensure these are connected and properly used.** Use of these devices can reduce dust related hazards.

h) **Do not let familiarity gained from frequent use of tools allow you to become complacent and ignore tool safety principles.** A careless action can cause severe injury within a fraction of a second.

4) POWER TOOL USE AND CARE

a) **Do not force the power tool. Use the correct power tool for your application.** The correct power tool will do the job better and safer at the rate for which it was designed.

b) **Do not use the power tool if the switch does not turn it on and off.** Any power tool that cannot be controlled with the switch is dangerous and must be repaired.

c) **Disconnect the plug from the power source and/or the battery pack from the power tool before making any adjustments, changing accessories, or storing power tools.** Such preventive safety measures reduce the risk of starting the power tool accidentally.

d) **Store idle power tools out of the reach of children and do not allow persons unfamiliar with the power tool or these instructions to operate the power tool.** Power tools are dangerous in the hands of untrained users.

e) **Maintain power tools. Check for misalignment or binding of moving parts, breakage of parts and any other condition that may affect the power tools operation. If damaged, have the power tool repaired before use.** Many accidents are caused by poorly maintained power tools.

f) **Keep cutting tools sharp and clean.** Properly maintained cutting tools with sharp cutting edges are less likely to bind and are easier to control.

Important Safety Instructions

g) **Use the power tool, accessories and tool bits etc., in accordance with these instructions and in the manner intended for the particular type of power tool, taking into account the working conditions and the work to be performed.** Use of the power tool for operations different from intended could result in a hazardous situation.

h) **Keep handles and grasping surfaces dry, clean and free from oil and grease.** Slippery handles and grasping surfaces do not allow for safe handling and control of the tool in unexpected situations.

i) **When using the tool, do not wear cloth work gloves which may be entangled.** The entanglement of cloth work gloves in the moving parts may result in personal injury.

5) BATTERY TOOL USE AND CARE

a) **Recharge only with the charger specified by the manufacturer.** A charger that is suitable for one type of battery pack may create a risk of fire when used with another battery pack.

b) **Use power tools only with specifically designated battery packs.** Use of any other battery packs may create a risk of injury and fire.

c) **When battery pack is not in use, keep it away from other metal objects, like paper clips, coins, keys, nails, screws or other small metal objects, that can make a connection from one terminal to another.** Shorting the battery terminals together may cause burns or a fire.

d) **Under abusive conditions, liquid may be ejected from the battery; avoid contact. If contact accidentally occurs, flush with water. If liquid contacts eyes, additionally seek medical help.** Liquid ejected from the battery may cause irritation or burns.

6) SERVICE

a) **Have your power tool serviced by a qualified repair person using only identical replacement parts.** This will ensure that the safety of the power tool is maintained.

b) **Never service damaged battery packs.** Service of battery packs should only be performed by the manufacturer or authorised service providers.

c) **Follow instruction for lubricating and changing accessories.**

Safety Symbols

Some of the following symbols may be used on this product. Please study them and learn their meaning. Proper interpretation of these symbols will allow you to operate the product better and safer.

SYMBOL	DESIGNATION/EXPLANATION
	Indicates danger, warning or caution. It means attention!!! Your safety is involved.
	Your manual contains special messages to bring attention to potential safety concerns as well as operating and servicing information. Please read all the information carefully to ensure satisfaction and safe use.
	Wear eye, hearing and head protection when operating this equipment.
	Do not expose to rain or use in damp locations.
	Waste electrical products should not be disposed of with household waste. Please recycle where facilities exist. Check with your Local Authority or retailer for recycling advice.
CE UK CA	Conforms to relevant safety standards.

Technical Specification

Rated Voltage:	40V DC
Motor:	Brushless
No Load Speed:	0-3000/min
Stroke Length:	26mm
Max. Cutting Capacity (Wood):	150mm
Max. Cutting Capacity (Aluminium):	10mm
Weight:	2.29kg

Sound Pressure Level:	L_{PA} 85.5 dB(A), K=5dB(A)
Sound Power Level:	L_{WA} 93.5 dB(A), K=5dB(A)
Vibration Levels:	
Cutting Board:	14.279m/s^2, K=1.5m/s^2
Cutting Sheet Metal:	16.490m/s^2, K=1.5m/s^2

Components & Controls

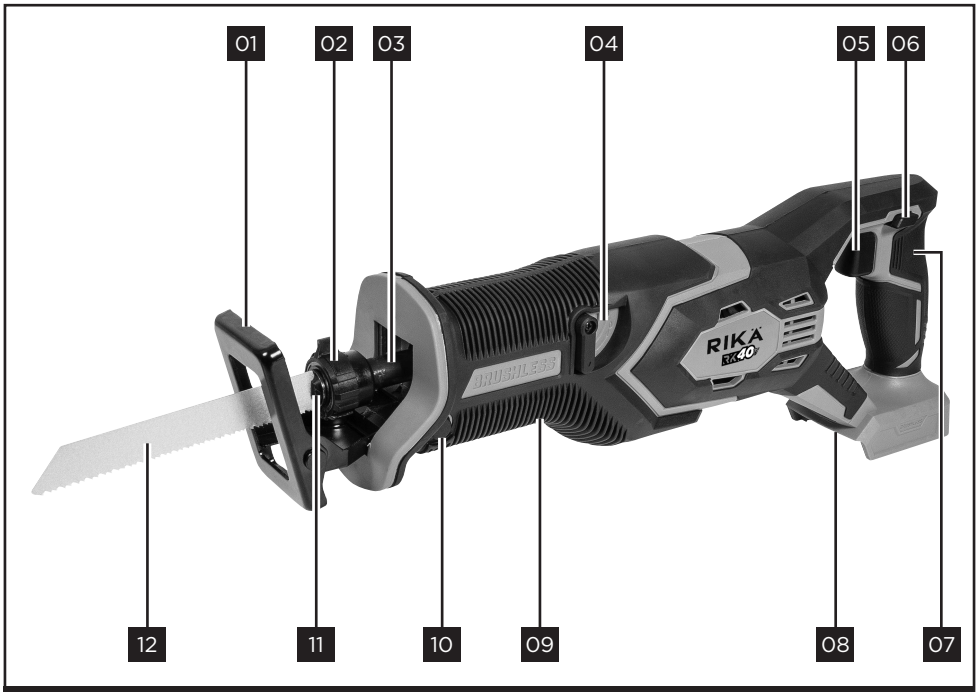

01. Adjustable footplate
02. Saw blade clamp lever
03. Stroke rod
04. Orbital action adjusting lever
05. On/Off trigger
06. Safety lock-off button
07. Rear handle
08. Battery mount
09. Gripping surface
10. Adjustable footplate locking button
11. Saw blade clamp opening
12. Saw blade

Unpacking

CAUTION. This packaging contains sharp objects. Take care when unpacking. Remove the machine, together with the accessories supplied, from the packaging. Check carefully to ensure that the machine is in good condition and account for all the accessories listed in this manual. Also make sure that all the accessories are complete.

If any parts are found to be missing, the machine and its accessories should be returned together in their original packaging to the retailer. Do not throw the packaging away, keep it safe throughout the guarantee period, then recycle if possible, otherwise dispose of it by the proper means. Do not let children play with empty plastic bags due to the risk of suffocation.

Assembly & Adjustments

WARNING! Do not use this product if it is not completely assembled or if any parts appear to be missing or damaged. Use of a product that is not properly and completely assembled or with damaged or missing parts could result in serious personal injury.

WARNING! Do not attempt to modify this product or create accessories or attachments not recommended for use with this product. Any such alteration or modification is misuse and could result in a hazardous condition leading to possible serious personal injury.

WARNING! To reduce the risk of injury, turn unit off and disconnect the battery pack from the machine before installing and removing accessories, before adjusting or changing setups or when making repairs. Be sure the On/Off trigger is in the OFF position. An accidental start-up can cause injury.

FITTING A SAW BLADE

CAUTION. When fitting or changing the saw blade, wear protective gloves.

Blades are sharp and can become hot when used for prolonged periods of time.

Selecting the correct type of blade is important in order to obtain the best performance from the saw.

Select the blade based on the application and on the material you wish to cut. Selecting the right blade will give you a smoother, faster cut and prolong the life of the blade.

Use only ½″ universal shank saw blades.

Using blades other than ½″ universal shank saw blades causes insufficient tightening of the blade, resulting in a serious personal injury.

The saw blade should not be longer than required for the intended cut. Use a narrow saw blade when sawing tight curves.

CAUTION. Always clean out all chips or foreign matter adhering to the blade and/or blade holder. Failure to do so may cause the blade to be insecurely fastened, resulting in a serious personal injury.

Rotate the saw blade clamp lever a quarter turn anti-clockwise as shown in Fig.1.

1. Saw blade
2. Saw blade clamp opening
3. Saw blade clamp lever

Insert a ½″ universal shank saw blade (teeth facing downward) into the clamp opening as far as it will go then release the saw blade clamp lever to lock the blade in place.

CAUTION. Pull on the blade to check that the saw blade is seated securely. A loose saw blade can fall out and lead to injuries.

REMOVING A SAW BLADE

CAUTION. When removing a saw blade, wear protective gloves. Blades are sharp and can become hot when used for prolonged periods of time.

Rotate the saw blade clamp lever a quarter turn anti-clockwise and remove the saw blade.

Assembly & Adjustments

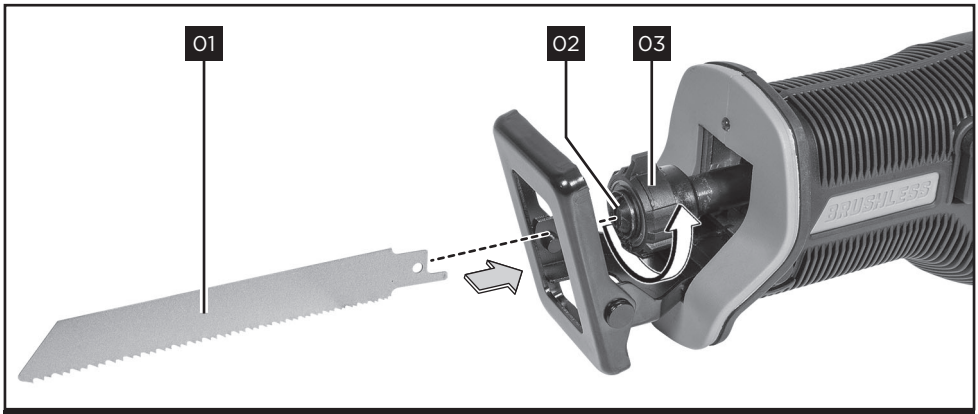

Fig.1

ADJUSTING THE LENGTH OF THE FOOTPLATE

The footplate can be adjusted to limit the length of blade that projects from the front of the tool. This can be used in a situation where you need to restrict the cut to just a thin layer of material like cutting plasterboard without intruding into the wall cavity too far.

Hold the saw with the underside facing up. Push the adjustable footplate locking button on the gripping surface and slide the footplate out to your required position, Fig.2.

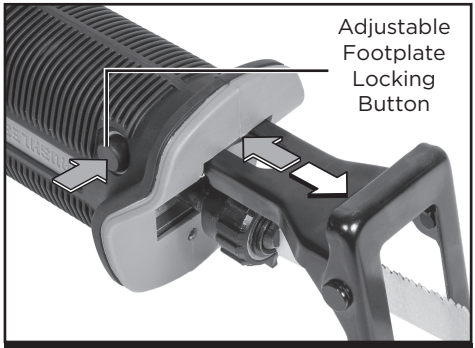

Fig.2

Release the adjustable footplate locking button to lock the footplate in place.

CAUTION. Pull on the footplate to check that the saw blade is locked in position. A loose footplate can lead to injuries.

CAUTION. Cut hazard. To prevent loss of control, never use tool without the footplate.

PIVOTING FOOTPLATE

Due to its movability, the adjustable footplate adapts to the required angular position of the surface, Fig.3.

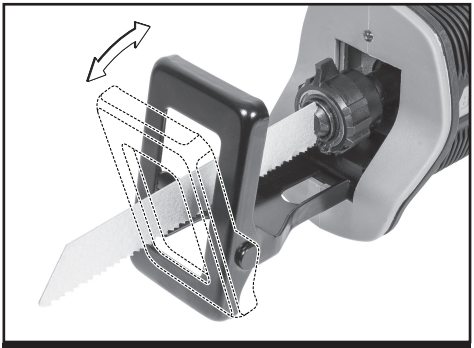

Fig.3

Assembly & Adjustments

INSTALLING A RIKA BATTERY PACK

WARNING! Always remove battery pack from your tool when you are assembling parts, making adjustments, cleaning, carrying, transporting or when not in use. Removing battery pack will prevent accidental starting that could cause serious personal injury.

Slide the battery pack into the battery mount, Fig.4.

Fig.4

NOTE: The battery has raised ribs which allows it to fit into the tool only one way. Make sure the battery pack snaps into place and that battery pack is secured in the tool before beginning operation. Improper installation of the battery pack can cause damage to internal components.

REMOVING THE BATTERY PACK

Locate the battery release catch on the top of the battery and press downward, Fig.5. Whilst holding down the battery release catch slide the battery pack away from the tool.

Fig.5

Operation

CAUTION. Before installing the battery cartridge into the tool, always check to see that the On/Off trigger actuates properly and returns to the "OFF" position when the trigger is released.

CAUTION. Before operating the reciprocating saw checks should be carried out with the battery pack disconnected from the machine.

Check that all safety guards are operating correctly, and that all adjustment mechanisms are securely tightened.

Check that the blade is secure and installed correctly and is the correct blade for the material being cut.

Keep blades clean & sharp.

Check the integrity of the battery pack.

Whenever possible clamp the workpiece to a rigid support structure such as a workbench, saw horse or similar.

Operation

Keep hands away from the cutting area and blade at all times. Do not reach underneath the work while the blade is in motion. Do not attempt to remove cut material while the blade is moving.

CAUTION. The blade will continue to reciprocate for a short period after the machine is switched off.

The operator should wear all relevant PPE (Personal Protection Equipment) necessary for the task ahead. This could include safety glasses, full face mask, dust masks, safety shoes etc.

WARNING! Any and all dust created is potentially hazardous to health. Some materials can be particularly harmful, and the operator should always wear a dust mask which is suitable for the material being worked with. Professional help and advice should be sought if the operator is at all unsure about the potential toxicity of the material to be cut.

WARNING! This machine must never be used to cut Asbestos or any material that contains, or is suspected to contain, Asbestos. Consult/inform the relevant authorities, and seek additional guidance if Asbestos contamination is suspected.

TURNING THE RECIPROCATING SAW ON AND OFF

WARNING! NEVER defeat the safety lock-off button by taping down or other means. A switch with a negated safety lock-off button may result in unintentional operation and serious personal injury.

WARNING! NEVER use the tool if it runs when you simply pull the On/Off trigger without pressing the lock-off button. A switch in need of repair may result in unintentional operation and serious personal injury. Return tool to a RIKA service centre for proper repairs BEFORE further usage.

To prevent the On/Off trigger from being accidentally pulled, a safety lock-off button is provided. To start the tool, depress the safety lock-off button and squeeze the On/Off trigger, Fig.16. Light pressure on the On/Off trigger results in low speed, allowing the saw to begin in a smooth, controlled manner.

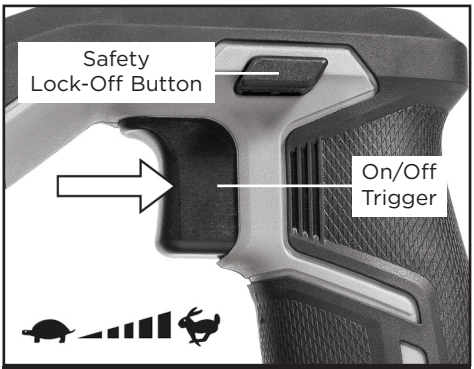

Fig.6

Further pressure on the switch results in an increase in speed.

Release the On/Off trigger to stop.

NOTE: Do not pull the On/Off trigger hard without pressing in the safety lock-off button. This can cause On/Off trigger breakage.

ELECTRIC BRAKE

The electric brake is activated after the tool is switched off. The brake does not work when the power supply is shut down, such as the battery is removed accidentally, with the switch still on.

Operation

CUTTING ACTION - ORBITAL OR STRAIGHT

This saw is equipped with two cutting actions, orbital and straight. Orbital action has a more aggressive blade motion and is designed for cutting in soft materials like wood or plastic. Orbital action provides a faster cut, but with a less smooth cut across the material. In orbital action, the blade moves forward during the cutting stroke in addition to the up and down motion.

NOTE: Metal or hardwoods should never be cut in orbital action.

To adjust the cutting action, move the orbital action lever between the two cutting positions: 0 and 1, Fig.7.

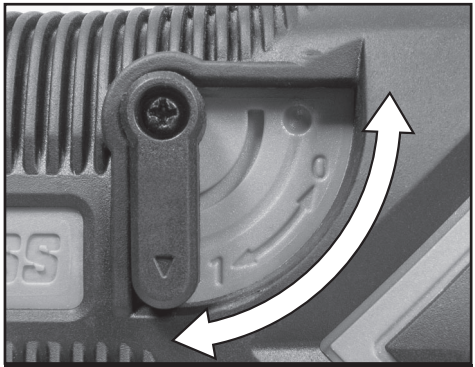

Fig.7

Position 0 is straight cutting.

Position 1 is orbital cutting.

Orbital cutting is not recommended for accurate work, it is more suited to demolition tasks where the finish does not matter so much.

LED WORKLIGHT

CAUTION. Do not directly look into the source of light.

Pull the On/Off trigger to activate the LED worklight. The LED worklight will illuminate continuously while the On/Off trigger is being pulled. The LED worklight goes out 10 seconds after releasing the trigger.

NOTE: The worklight is for lighting the immediate work surface and is not intended to be used as a flashlight.

OPERATION

WARNING. Switch the power tool off immediately if the saw blade becomes blocked.

WARNING. During operation fine dust will be generated. These dusts are highly inflammable and explosive! Do not smoke during operation, keep heat sources and open flames out of the working area! Always wear a dust mask to protect yourself against hazards resulting from fine dust!

WARNING. Always press the footplate firmly against the workpiece during operation. If the footplate is removed or held away from the workpiece during operation, strong vibration and/or twisting will be produced, causing the blade to snap dangerously.

WARNING. Always use eye protection. All users and bystanders must wear approved eye protection.

WARNING. Exercise extra caution when cutting towards operator. Always hold saw firmly with both hands while cutting.

CAUTION. Always wear gloves to protect your hands from hot flying chips when cutting metal.

CAUTION. Always use a suitable coolant (cutting oil) when cutting metal. Failure to do so will cause premature blade wear.

Operation

CUTTING

Before cutting any type of material, be sure it is firmly anchored or clamped to prevent slipping. Place the blade lightly against work to be cut, squeeze the On/Off trigger and allow it to obtain maximum speed before applying pressure. Whenever possible, the footplate must be held firmly against the material being cut. This will prevent the saw from jumping or vibrating and minimise blade breakage. Any cuts which put pressure on the blade such as angle or scroll cuts increase potential for vibration, kickback, and blade breakage.

WARNING. Use extra caution when cutting overhead and pay particular attention to overhead wires which may be hidden from view. Anticipate the path of falling branches and debris ahead of time.

WARNING. Inspect the work site for hidden gas pipes, water pipes, or electrical wires before making blind or plunge cuts. Failure to do so may result in explosion, property damage, electric shock, and/or serious personal injury.

PLUNGE CUTTING

CAUTION. Plunge cuts may only be applied to soft materials, such as wood, gypsum board, etc.

For plunge cutting, use only short saw blades.
The initial step in pocket cutting is to measure the surface area to be cut and mark clearly with a pencil, chalk or scriber. Use the appropriate blade for the application. The blade should be long enough to extend past the shoe and the thickness of the workpiece during the cut.

Insert a suitable blade into the saw blade clamp opening.

Next, tip the saw backward until the back edge of the shoe is resting on the work surface and the blade clears the work surface.

Squeeze the On/Off trigger and allow it to come up to speed. Grip the saw firmly with both hands and begin a slow, deliberate upward swing with the handle of the saw, keeping the bottom of the footplate firmly in contact with the workpiece.

The blade will begin to feed into material. Always be sure blade is completely through material before continuing with a pocket cut.

NOTE: In areas where blade visibility is limited, use the edge of the saw shoe as a guide. Lines for any given cut should be extended beyond the edge of cut to be made.

FLUSH CUTTING

Using a bimetal saw blade (not provided), items still attached to a wall (e. g. projecting building elements such as water pipes, etc.) can be sawn off flush at the wall.

Pay attention that the saw blade always extends beyond the diameter of the material being worked. There is danger of kickback.

Position the saw blade directly against the wall and apply some lateral pressure via the tool until the footplate faces against the wall. Switch the power tool on and saw through the workpiece, applying constant lateral pressure.

METAL CUTTING

When cutting metals a suitable cooling/ cutting oil must be used.

Simply squirt the lubricant onto the blade or work piece at regular intervals during cutting to reduce blade wear.

CAUTION. Do not immerse the reciprocating saw in water or allow coolant to enter the casing. A electric shock could occur.

Operation

Always use a blade that is capable of cutting metal. Use a finer blade for ferrous metals and a coarse blade for non-ferrous materials.

In thin gauge sheet metals it is best to clamp wood to both sides of sheet. This will insure a clean cut without excess vibration or tearing of metal. Never force the cutting blade as this reduces blade life and causes costly blade breakage.

NOTE: When cutting metal, keep exposed portion of saw bar clean and free of metal chips by wiping frequently with an oily cloth. Use extreme caution in disposing of oily cloth after completion of job to prevent potential fire hazard.

NOTE: Metal should never be cut in orbital action mode.

Maintenance

WARNING! Always be sure that the tool is switched off and the battery pack is removed before attempting to perform inspection or maintenance.

From time to time the ventilation slots on the motor casing should be cleaned out. If the unit should become defective, repair should be performed by an authorised service agent for electric tools.

Ventilation openings and switch levers must be kept clean and free of foreign matter. Do not attempt to clean by inserting pointed objects through openings.

Before installing a saw blade, remove all sawdust that has accumulated.

The tool may be cleaned most effectively with compressed dry air especially around the saw blade receptacle where dust and wood chips gather. Always wear safety goggles when cleaning tools with compressed air.

Keep saw blades clean and sharp. Sharp blades minimise stalling and kickback.

WARNING!. Always wear safety goggles or safety glasses with side shields during power tool operation or when blowing dust. If operation is dusty, also wear a dust mask.

Inspect the general condition of the tool. Check for loose screws and bolts, misalignment or binding of moving parts, cracked or broken parts, damaged electrical wiring and any other condition that may effect its safe use. If abnormal noise or vibration occurs have the machine inspected by an authorised service agent.

Check that all safety features and guards are operating correctly on a regular basis. Only use this machine if all guards/safety features are fully operational.

Avoid using solvents when cleaning plastic parts. Most plastics are susceptible to damage from various types of commercial solvents and may be damaged by their use. Use clean damp cloths to remove dirt, dust, oil, grease, etc.

WARNING! Do not at any time let brake fluids, gasoline, petroleum based products, penetrating oils, etc., come in contact with plastic parts. Chemicals can damage, weaken or destroy plastic which may result in serious personal injury.

Maintenance

Electric tools used on fibreglass material, wallboard, spackling compounds, or plaster are subject to accelerated wear and possible premature failure because the fibreglass chips and grindings are highly abrasive to bearings, brushes, commutators, etc.

Consequently, we do not recommended using this tool for extended work on these types of materials. However, if you do work with any of these materials, it is extremely important to clean the tool using compressed air.

LUBRICATION
All of the bearings in this tool are lubricated with a sufficient amount of high grade lubricant for the life of the unit under normal operating conditions. Therefore, no further lubrication is required.

Service

Now that you have purchased your tool, should a need ever exist of repair or service, simply contact your nearest RIKA Authorised Service Centre or other qualified service organisation. Be sure to provide all pertinent facts when you call or visit.

Environmental Protection

Information for (private householders) for the environmentally responsible disposal of Waste Electrical and Electronic Equipment (WEEE)

This symbol on products and or accompanying documents indicates that used and end of life electrical and electronic equipment should not be disposed of in household waste. For the proper disposal, treatment, recovery and recycling, please take these products to designated collection points, where they will be accepted on a free of charge basis. Alternatively, in some countries you may be able to return your products to your retailer upon the purchase of an equivalent new product. Disposing of this product correctly will help to save valuable resources and prevent any potential adverse effects on human health and the environment which could otherwise arise from inappropriate waste disposal and handling. Please contact your local authority for further details of your nearest designated collection point. Penalties may be applicable for incorrect disposal of this waste in accordance with national legislation.

FOR BUSINESS USERS IN THE EUROPEAN UNION.
If you wish to discard electrical and electronic equipment, please contact your dealer or supplier for further information.

Information on Disposal in other Countries outside the European Union.
This Symbol is only valid in the European Union.
If you wish to dispose of this product, please contact your local authorities or dealer and ask for the correct method of disposal.

Notes

Notes

EC Declaration of Conformity

1. **Product model:** RK40RS

2. **Name and address of the manufacturer or his authorised representative:**

RIKÄ

SGS Engineering (UK) Ltd
Unit 1 West Side Park, Raynesway,
Derby, DE21 7AZ

3. **This declaration of conformity is issued under the sole responsibility of the manufacturer.**

4. **Object of the declaration:**

   Equipment: 40V Cordless Reciprocating Saw
   Brand name: RIKA
   Model/type: RK40RS

5. **The object of the declaration described above is in conformity with the relevant statutory requirements:**

Supply of Machinery (Safety) Regulations 2008 Electrical Equipment (Safety) Regulations 2016 Electromagnetic Compatibility Regulations 2016 The Restriction of the Use of Certain Hazardous Substances in Electrical and Electronic Equipment Regulations 2012

6. **References to the relevant designated standards used or references to the other technical specifications in relation to which conformity is declared:**

BS EN55014-1	BS EN 62841-1
BS EN55014-2	BS EN 62841-2-11

7. **The person authorised to compile the technical file:**

   Name: Neil Sansom
   Address: SGS Engineering (UK) Ltd, Unit 1 West Side Park, Raynesway, Derby, DE21 7AZ

   Signed for and on behalf of:

   Authorised Representative

   Neil Sansom, CEO
   Date: 09/03/2026

UK CA 26